COFFIN

Improved Operation of the Power Plant at the University of Illinois

Electrical Engineering

B. S.

1909

UNIVERSITY
OF
ILL. LIBRARY

UNIVERSITY OF ILLINOIS
LIBRARY

Class 1909 Book C654 Volume

Je 09-20M

IMPROVED OPERATION OF THE POWER PLANT AT THE UNIVERSITY OF ILLINOIS

BY

FRANCIS ALBERT COFFIN

THESIS FOR THE DEGREE OF BACHELOR OF SCIENCE

IN ELECTRICAL ENGINEERING

IN THE

COLLEGE OF ENGINEERING

OF THE

UNIVERSITY OF ILLINOIS

Presented June, 1909

1309
C654

UNIVERSITY OF ILLINOIS

June 1, 1909

THIS IS TO CERTIFY THAT THE THESIS PREPARED UNDER MY SUPERVISION BY

FRANCIS ALBERT COFFIN

ENTITLED IMPROVED OPERATION OF THE POWER PLANT AT THE UNIVERSITY OF ILLINOIS

IS APPROVED BY ME AS FULFILLING THIS PART OF THE REQUIREMENTS FOR THE

DEGREE OF Bachelor of Science in Electrical Engineering

Morgan Brooks
Instructor in Charge

APPROVED: Morgan Brooks

HEAD OF DEPARTMENT OF Electrical Engineering

145211

Digitized by the Internet Archive
in 2013

http://archive.org/details/improvedoperatio00coff

INDEX

	Page
INTRODUCTION	2
EXISTING CONDITIONS	3
Present Equipment	3
Present Method of Operating	4
Investigation and Changes Proposed	5
THEORY	6
Parallel Operation	6
The Common Method of Synchronizing	7
The New Method of Synchronizing	10
DESIGN and TEST of COIL	11
Capacity of Coil and Size of Wire	11
The Shape of The Coil	12
Test of The Coil	15
CONNECTIONS and METHOD SUGGESTED	23
Connections	23
Method	23
BIBLIOGRAPHY.	

UIUC

INTRODUCTION

In view of the fact that the power plant of the University of Illinois is loaded during the winter months to its utmost capacity, and that in the coming year the additional load of the new Physics Laboratory, the new Natural History Hall and the Young Men's Christian Association building will have to be cared for, there seems to be no alternative from installing additional generating capacity, but whether this is done or not it is equally essential that a method of operating be devised provided for and put into practice, that will not only insure safety and continuity of service, but will afford the greatest flexibility, effectiveness and economy in operating.

It has been the purpose in this thesis work to investigate the operating conditions, to study the methods and apparatus now employed, to devise a better method of operating, to design, construct and install such apparatus and make such changes in the switchboard connections as are necessary for putting this method into practice.

EXISTING CONDITIONS

Present Equipment , The present equipment consists of a 120 kilowatt Westinghouse alternator direct-connected to a 14" x 24" x 14" upright, cross-compound Westinghouse engine, and a 75 kilowatt Westinghouse alternator belted to a line shaft which is driven by a 10" x 16" x 12" horizontal , tandem-compound Ideal engine , both machines generate 2 - phase , 60 cycle energy at 440 volts pressure. In addition to the 75 kilowatt alternator there are connected to the Ideal engine, through the line shaft, an 85 kilowatt, 220 volt direct current generator, and an air compressor which requires about 25 horsepower of energy. The air compressor is not a constant load, but operates automatically to maintain a constant pressure of 40 pounds per square inch in the air system of the shops and laboratories. In the substation in the Electrical laboratory there is a 45 kilowatt motor-generator set which may be operated as a synchronous motor - direct current generator from one of the power plant alternators or as a direct current motor - alternating current generator from the direct current machine in the power plant. Under ordinary conditions this set is used for laboratory purposes only, but during the time of the peak load in the winter season it is used to help out the alternating current system.

The pressure of the steam supplied to the two engines is maintained at about 145 pounds per square inch. The engines are designed, however, for a pressure of 175 pounds per square inch. In addition to this low initial pressure the steam is exhausted into the general heating mains where a pressure of from 10 to 30 pounds per square inch is maintained. It is found, upon investiga-

tion that this low initial pressure, the high back pressure, and the mixed load on the Ideal engine give three conditions which are very unfavorable for the best operating practice.

The power plant switch board has probably met the requirements very well at one time, but since its installation a number of new circuits have been added, and many changes in others have been made, until now the back of the board is an interwoven mass of wires so dense that any necessary repairs can be made only with great difficulty and danger.

There are two sets of main buses, and either alternator or any circuit can be switched to either bus. The substation circuit , however, can be operated only on the inside bus. There is no tie switch between the two buses , and the only synchronizing device is a set of lamps long in disuse and not connected between the leads of the two alternators.

Present Method of Operating , - Under the present method of operating the 75 kilowatt alternator is connected to the inside bus where it supplies the substation and Electrical laboratory with alternating current, and as many of the circuits as are required to make its proportionate share of the total load. The 120 kilowatt machine carries its proportionate share of the load through the outside bus. Load is transferred from one machine to the other by simply throwing circuit switches from one bus to the other, which , of course causes a flashing of the lamps..

No attempt is ever made to operate the two machines in parallel, in fact the synchronizing lamps are not connected so that this can be done conveniently.

Investigation and Changes Proposed,- It has been the purpose in this thesis work to investigate the feasibility of operating the two alternators in parallel continuously, of operating them in parallel under certain conditions while shifting load, or of operating them in parallel upon special occasions when it is particularly undesirable to have the flashing of the lights due to switching. It has been proposed to remove some of the unnecessary switches from the board, to simplify the connections on the back of the board, and remove some unnecessary apparatus, to install a bus tie switch, and a double throw switch for the substation circuit that will allow it to be connected to either bus, to connect properly the set of synchronizing lamps, and to design construct and install a coreless inductance, synchronizing coil to use in paralleling the two alternators.

THEORY

Parallel Operation , - As the method outlined in this thesis is to depend largely upon parallel operation of the two alternators, and upon the facility and safety with which the two may be synchronized it may be well at this time to give a brief outline of the theory involved in these two points.

In order that two or more alternators may be run in parallel, they should have similar wave forms, they should run at the same frequency, or their electromotive force waves should be in unision, and they should generate the same voltage. When they meet these requirements they may be connected together, and will operate successfully. There will be a synchronous motor action between the machines which will hold them together so firmly that if the driving power is removed from either, the other will drive it as a synchronous motor or, at least, will tend to do this to the limit of its capacity. The two machines need not have the same number of phases. A single phase machine will operate successfully in parallel with one phase of a two phase or a three phase machine. In the method outlined here in, in fact, the synchronizing is done on one phase, the other being closed in later.

It will be found , however, that more or less synchronizing current will flow between the two machines, depending upon the conditions existing at the time they are connected, and upon their operation afterward. This current is necessary because it supplies the power that holds the machines together. Without it they would fall apart. It may be considered chiefly the result of the four following causes :-

(1) A difference in the wave form of the two alternators.

(2) A pulsation during each revolution of the prive movers of

the alternators.

(3) The speed characteristics of the engines, or prime movers.

(4) A difference in the values of electromotive force. The first cause affords little trouble in the case of small machines, but where large units are employed it must be taken into account.

The second cause can give trouble only in the case of reciprocating engine practice, where the engines do not beat together , or keep in step. It may often be noticed distinctly where the two engines run at different speeds. It is a frequent cause of serious trouble that is now avoided by the use of the steam turbine.

The third cause is one of the most frequent and serious sources of trouble. For the best operation the speed regulation of both engines should be very low, and the two should be equal. If they do not govern closely considerable difficulty will likely be experienced in dividng the load on the two generators.

Fourth ,- When two alternators are properly phased, and their prime movers run without variation or with similar variation a cross current may flow due to a difference in the two electromotive forces at the time the machines are parallelled or to a variation in the field excitation of one machine afterward . This current does not represent energy, it lags with respect to the higher voltage and leads with respect to the lower. Its action is to counteract the magnetism of the stronger machine and assist that of the weaker, thereby making the two voltages equal.

<u>The Common Method of Synchronizing</u> , - As stated above, when

two machines are to be switched to the same bus bars they must be in step, and their frequencies and voltages must be equal. The voltages are always measured with a voltmeter, and various devices have been employed to determine whether or not the machines are in step and equal in frequency. The device most commonly emplyed is the synchronizing lamp bank. The machines to be synchronized are connected in series, with a lamp bank interposed as shown in Figure I, the voltage of the lamp bank being equal to the sum of the voltages of the two machines. As the machines revolve going into and coming out of phase, these lamps flicker from a maximum to a minimum. When the lamps are dark the machines are in phase, and when bright they are in opposition. When the lamps flicker rapidly the machines are of different frequencies, that is, one is revolving faster than the other. The speeding machine should be retarded or the lagging machine accelerated. As this is done it will be noted that the flickering of the lamps becomes less and less frequent, or that they change more and more slowly from dark to bright. When a beat is obtained such that the time between two successive conditions of maximum brightness is 5 Or 6 seconds. the switch may be closed provided it is done at the instant the lamps are completely

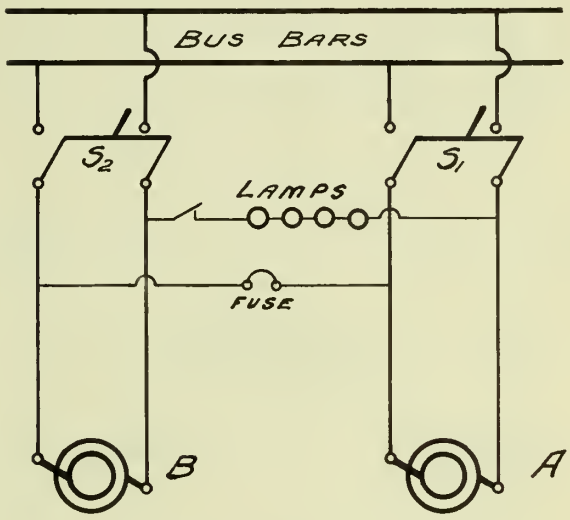

FIG. 1

dark. A synchronizing current will then flow between the two machines, and they will be held together. If the connections of the terminals of the lamp circuit , as shown in Figure I , be reversed on one machine the synchronizing switch must be closed when the lamps are at maximum brightness. Either connection may be used with equally satisfactory results. There is one danger in synchronizing on dark lamps, however, that is, a filament might break just at the instant the switch was to be closed, and the true conditions would not be indicated.

In cases where the voltages of the machines are so high that lamps can not be used, as described above, conveniently , a transformer is connected in the circuit and the same effect upon the lamps is obtained.

A second device for synchronizing , one that is now coming into general use, is an instrument called the synchroscope. This instrument consists essentially of a set of coils so arranged as to rotate a pointer as the phase angle of the alternators changes. The speed of the pointer indicates the difference in frequency, and the direction of its rotation indicates whether the incoming machine is running too fast or two slowly. The operator regulates the speed of the incoming

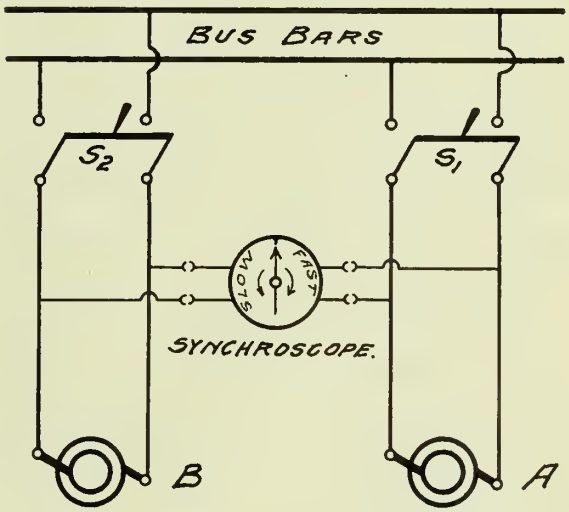

FIG. 2.

machine until the pointer rotates as slowly as it will, then at an instant when it is pointing in an exact vertical direction he closes the switch. This instrument facilitates the operation of synchronizing to a very great degree, and is now generally used in all large generating stations.

The New Method of Synchronizing , - Within the past few years a method of synchronizing has been devised, chiefly under the direction of Professor Morgan Brooks, at the University of Illinois. Whereby two alternators may be made self-synchronizing , that is, they may be connected together at any time desired regardless of their phase relation, and they will pull each other into step and hold together. The methoddepends upon the use of a small coreless reactance coil connected in series with one phase of the two machines, as shown in Figures 4 and7. Its function is to prevent an excessive phasing current , and still retain sufficient synchronizing power to pull and hold the machines together. The action of the coil may be clearly understood from the following discussion of its design and the tests made with it. The effectiveness of such a coil in the synchronizing of alternators has been so firmly established that it has not been considered necessary to demonstrate that point in this work. An extensive discussion of it may be found in the thesis of Messrs. R. A. Brooks and H. C. Gardner written in 1907. An effort has been made, however, to find a formula by means of which the dimensions of the most effective and economical coil, for a given amount of wire , can be determined. The results of these investigations are given in the following chapter.

DESIGN AND TESTS OF COIL.

Capacity of Coil and Size of Wire, - Regardless of which machine is being synchronized the coil must be designed for a capacity corresponding to that of the smaller machine. The capacity of this machine is 75 kilowatts or 37.5 kilowatts per phase. As only one phase is to be synchronized it is necessary to provide for a 37.5 kilowatt capacity. With a non-inductive load and 440 volts pressure the full load machine current per phase will be 37500/440 or 85.3 amperes. It was considered then that in order to be on the side of safety and to obtain the best results an impedance should be provided that would allow about half of the full load current, or 40 amperes, to flow under the worst conditions . This impedance would be 880/40 or 22 ohms, where 880 would be the voltage between the two machines when they were 180 degrees apart in phase. For satisfactory results the resistance of the coil must be so low, compared with the impedance, that it is practically negligible so the reactance may be considered equal to the impedance or 22 ohms. Then $X = 22$ ohms $= 2\pi f L$ where f is the frequency, and L is the inductance . $L = 22/2\pi f$. In this case $f = 60$. Therefore $L = 22/ 2 \times 3.14 \times 60 = .06$ henry . It was not considered necessary to use a wire in this coil with a capacity of 40 amperes, because the average heating effect due to a current which varies from 0 to 40 amperes would not be much greater than that due to 20 amperes of continuous current. It was decided then to use a wire with a capacity of 20 amperes, and this is found to be # 12 copper wire. Its cross-section area is 6530 circular mils, allowing for insulation the cross

section area was taken as 10,000 circular mils.

The Shape of the Coil,- From a set of exceedingly complicated formulas published by the national Bureau of Standards Professor Morgan Brooks has derived the following formulas for obtaining the most economical shape of coil for a given inductance.

$$(1) \quad L = \frac{(D - t)^2 \times N^2 \times 10^{-8}}{l + t + .45\ D}$$

Where D is the outside diamter of the coil.

l is the length,

t is the depth,

and N is the total number of turns, as shown in Figure 3. All dimensions are expressed in centimeters. It is evident at once that the denominator of this expression is empirical. It has been found by a series of calculations and a set of curves that for the best results the ratio of l : t : D should be approximately as 5 : 4 : 20. These ratios not only give the best results in the way of maximum inductance, but they give a coil of a shape that is most convenient to handle and to attach to a switchboard. If it is desired to design a coil with a different ratio of dimensions this formula must be modified somewhat. Thus for a coil in which D is to be very large compared with l the following form

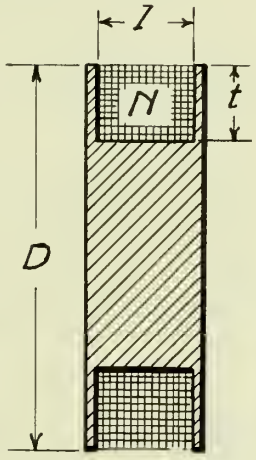

FIG. 3.

has been derived,-

$$(2) \quad L = \frac{(D - t)^2 \times N^2 \times 10^{-8}}{1 + t + .5 \times D} \times \frac{10 \times 1 + 12 \times t + D}{10 \times 1 + 10 \times t + .7D} \times$$

$$\log\left(10 + \frac{D}{10 \times 1 + 15 \times t}\right)$$

For the ratios of dimensions given above, however, the last two terms of equation (2) equal practically unity.

In the determination herein equation (1) is all that will be employed. In order to determine the dimensions we proceed as follows,- Introduce a factor (a) and let $1 = 5a$, $t = 4a$, and $D = 20a$. Substituting these values and the values of L determined above in equation (1) we have,-

$$L = .06 = \frac{(16a)^2 \times N^2}{18a \times 10^8} \quad \text{or} \quad N = 1000\sqrt{.43/a} \ .$$

To determine (a) then we substitute as follows until a proper value is obtained,-

(1) Let $a = 1$ $\qquad N = 1000\sqrt{.43} = 650$

The cross section area $= 650 \times 10{,}000 = 6{,}500{,}000$ square mils , or 6.5 square inches.

But $5a \times 4a/2.54^2 = 3.08$ square inches. From this it is evident that this value of (a) is too small.

(2) Let $a = 1.5$ $\qquad N = 1000\sqrt{.43/1.5} = 537$

The cross section area $= 5.37$ square inches.

But $1 \times t = 7.5 \times 6/2.54^2 = 7$ square inches.

This value for (a) is therefore too large but the proper value is between these two so we assume a value of 1.3

(3) Let a = 1.3 $$N = 1000\sqrt{\frac{.43}{1.3}} = 565$$

The cross-section area = 5.65 square inches,

$l \times t = 6.5 \times 5.3/2.54^2 = 5.3$ square inches.

Thus we have 5.3 as against 5.65 which checks close enough, and our dimensions will be : -

Dimension	cm.	inches
D	26	10
l	6.5	2.56
t	5.2	2.2

N = 565 turns, and the mean diameter = 8 inches .

The length of the wire required will be $\frac{565 \times 3.14 \times 8}{12} = 1184$ or 1200 feet.

Using #12 wire weighing 22 pounds per 100 feet 26.4 pounds will be required . A spool of magnet wire with a new brand of asbestos insulation known as " Vulcabeston" was ordered from Western Electric Company of Chicago. After a month's waiting the wire was received but was found to be #13 instead of #12. The dimensions of the wire were measured and found to be as follows ,-

Diameter of wire over insulation .0809"

" " " " bare .0710"

Thickness of Insulation ,00495"

cross-section area of the wire without insulation 5040 circular mils or .003959 square inch.

cross-section area with insulation 6545 circular mils or

.00514 square inch.

This wire was considered sufficiently large to carry the current but when it was wound on the spool that had been designed for the # 12 it was found that the shape of the coil was different from that desired. In order to make an even number of layers 600 turns were wound on the spool. The impedance of the coil was then measured roughly and found to be about 25 ohms. It was then decided to make a number of tests of the coil in the substation before making any refined measurements of impedance or resistance.

Test of the Coil , -

With the coil connected, as shown in Figure 4, between the power plant PP and the substation SS, the substation machine was brought up to synchronous speed. Switch #1 was closed when the machines were exactly in phase. There was no phasing current, of course, but there was also only about 10 or 15 amperes of synchronizing current found to flow. This was not enough to hold the machines together and in a short time they pulled apart. Another test was then made closing switch #1 when the machines were about 90 degrees apart in phase, About 15 amperes of phasing current were found to flow and the synchronizing current was about the

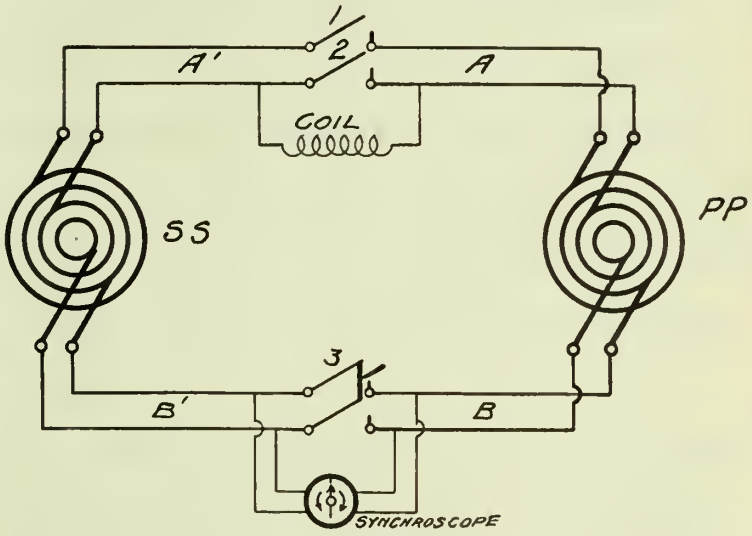

FIG. 4.

same as in the first case. The operation was then repeated, switch #1 being closed when the two machines were 180 degrees apart. In this case the voltage impressed on the coil was 880 volts, but the phasing current was slightly less than 40 amperes, and the synchronizing current was the same as before. These results showed that the impedance was too great, so several layers of the wire were removed, the tests were repeated, and the results showed an improvement. When four layers or 120 turns had been removed switch #1 could be closed with the machines 180 degrees apart in phase, and a phasing current of about 50 amperes anda synchronizing current of 20 amperes would flow, the machines held together fairly well but not as firmly as was desired. Two more layers were then removed leaving 420 turns on the coil. A series of tests were then made and the results were entirely satisfactory. Under the worst conditions a phasing current of from 70 to 100 amperes would flow, and the synchronizing current was about 25 amperes, This would pull the machines together completely and hold them so.

The coil was now considered satisfactory in all respects regarding operation , but removing the turns had changed the shape considerably, so it was decided to rewind it on a new spool with dimensions in accordance with the original design. A spool was constructed , of wood, with dimensions as shown in Figure 5,and lined on the surface next to the wire with red, fiber board 3/64" thick. The fiber board was put on as a protection against fire in case the coil should be heated to a high temperature, as it is claimed that the asbestos insulation will stand a red heat.

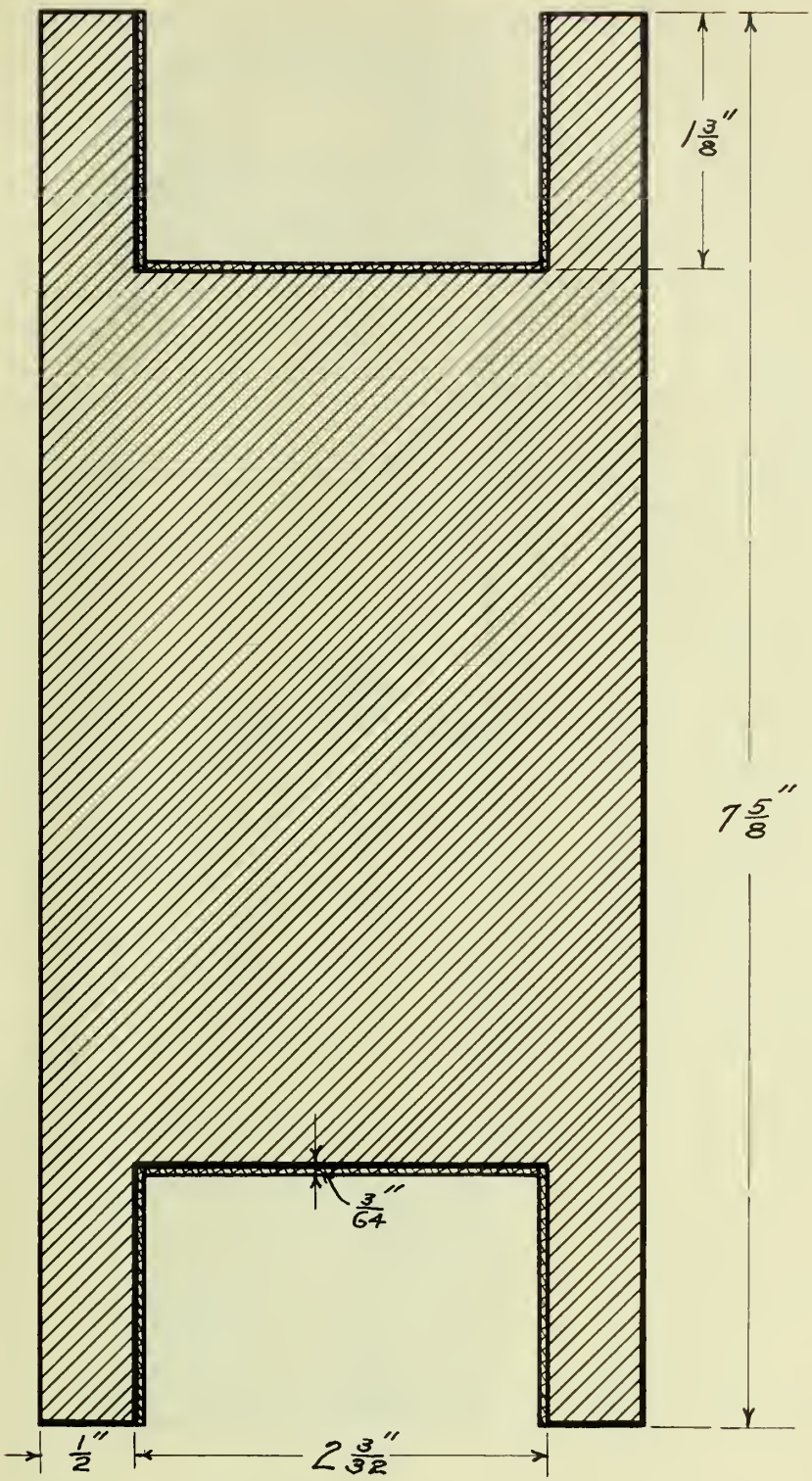

FIG. 5.

CROSS-SECTION OF SPOOL.

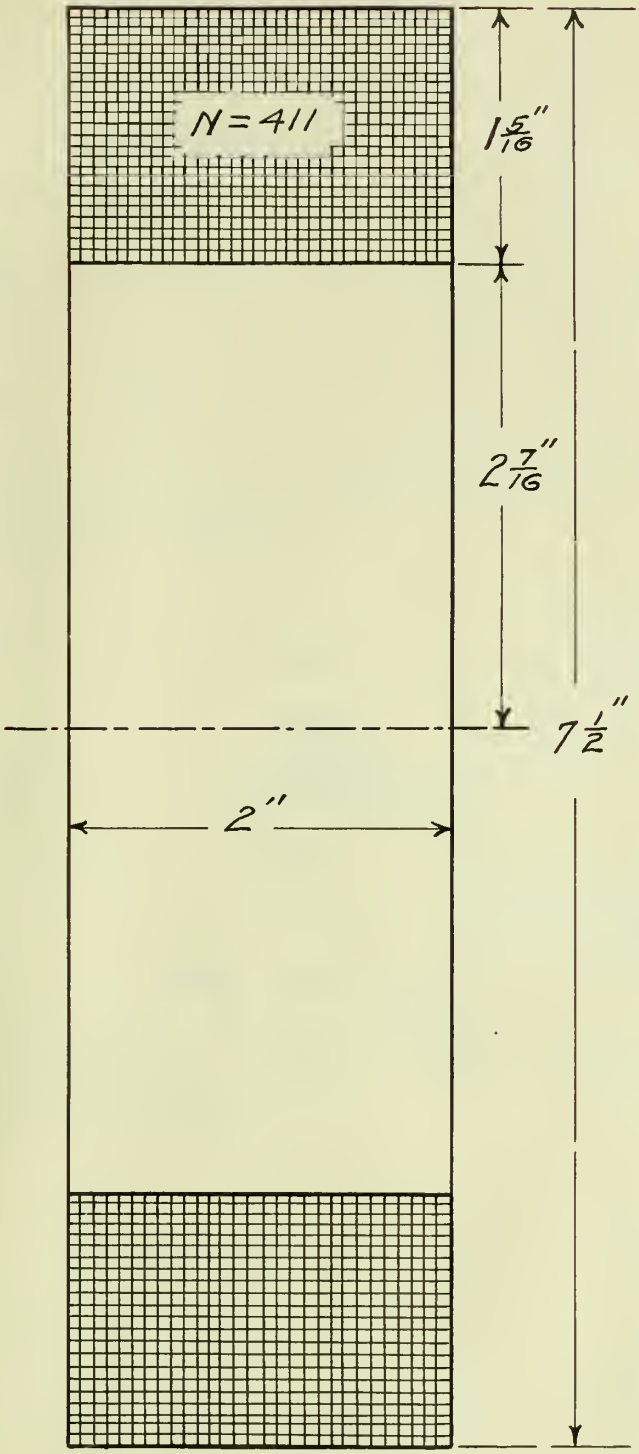

FIG. 6.

CROSS-SECTION OF COIL.

Description of Coil when Completed, -

For dimensions see Figure # 6	
Number of layers	18
" " turns per layer,	21 -23
Total number of turns	411
Total weight of the wire	11.1 lbs.
Weight per foot	.0162 lb.
Total length of wire	688 feet.

The resistance of the coil was measured by means of the potentiometer with the following results, -

E	I	R
.19170	.14520	1.3225
.27524	.20733	1.3275
.41223	.30895	1.3343
.53770	.40050	1.3427
.81290	.60150	1.3515
	Mean resistance	1.3357 ohms

The impedance was measured by means of the precisions instruments with results as follows ,-

E	I	Z
73.6	6.75	10.90
75.4	6.84	11.02
82.8	7.55	10.96
	Mean Impedance	10.96 ohms

Considering X practically equal to Z we have :—

$X = 10.96$ ohms, But $X = 2\pi f L = wL$

$L = X / 2\pi f = 10.96/2 \times 3.14 \times 60 = .0291$ henrys.

Substituting the actual dimensions in Professor Brook's formula we obtain the following results , -

From Figure # 6 we have ,

$D = 7.5''$, $l = 2''$ and $t = 1.3125''$

$$L = \frac{(7.5 - 1.3125)^2 \times 411^2 \times 2.54}{(2 - 1.3125 - .45 \times 7.5)\, 10^8}$$

$$= \frac{38.3 \times 178500}{6.69 \times 108} = .025 \text{ henrys.}$$

It may appear from these calculations and results that there was either an excessive error in the first calculation or an unnecessary factor of safety allowed. The fact is, the change in the size of wire affected the inductance appreciably, but also a large factor of safety was allowed. This was allowed because there seems to be no formula that will give the exact inductance for a coil of any shape, besides the inductance of the two machines aids the coil, and it is more convenient to change the coil than to measure this inductance.

After comparing the results obtained by Professor Brook's formula and those obtained by several formulas published by the national Bureau of Standards with the actual determinations, it was found that his formula gives the most accurate results in this case notwith standing it is empirical. In addition to this the simplicity of his formula diminishes to a great

degree the likelihood of error in calculation.

When a number of tests had been made in the substation, under various conditions of frequency and phase relation, all of which resulted satisfactorily, temporary connections were made on the power plant switch-board, and the two alternators were synchronized by means of the coil. A number of trials were made under various conditions, and in every one the coil performed its function with even greater effectiveness than it had shown in the substation tests. The phasing current was slightly greater than that obtained in the substation tests, but the synchronizing current was practically the same .

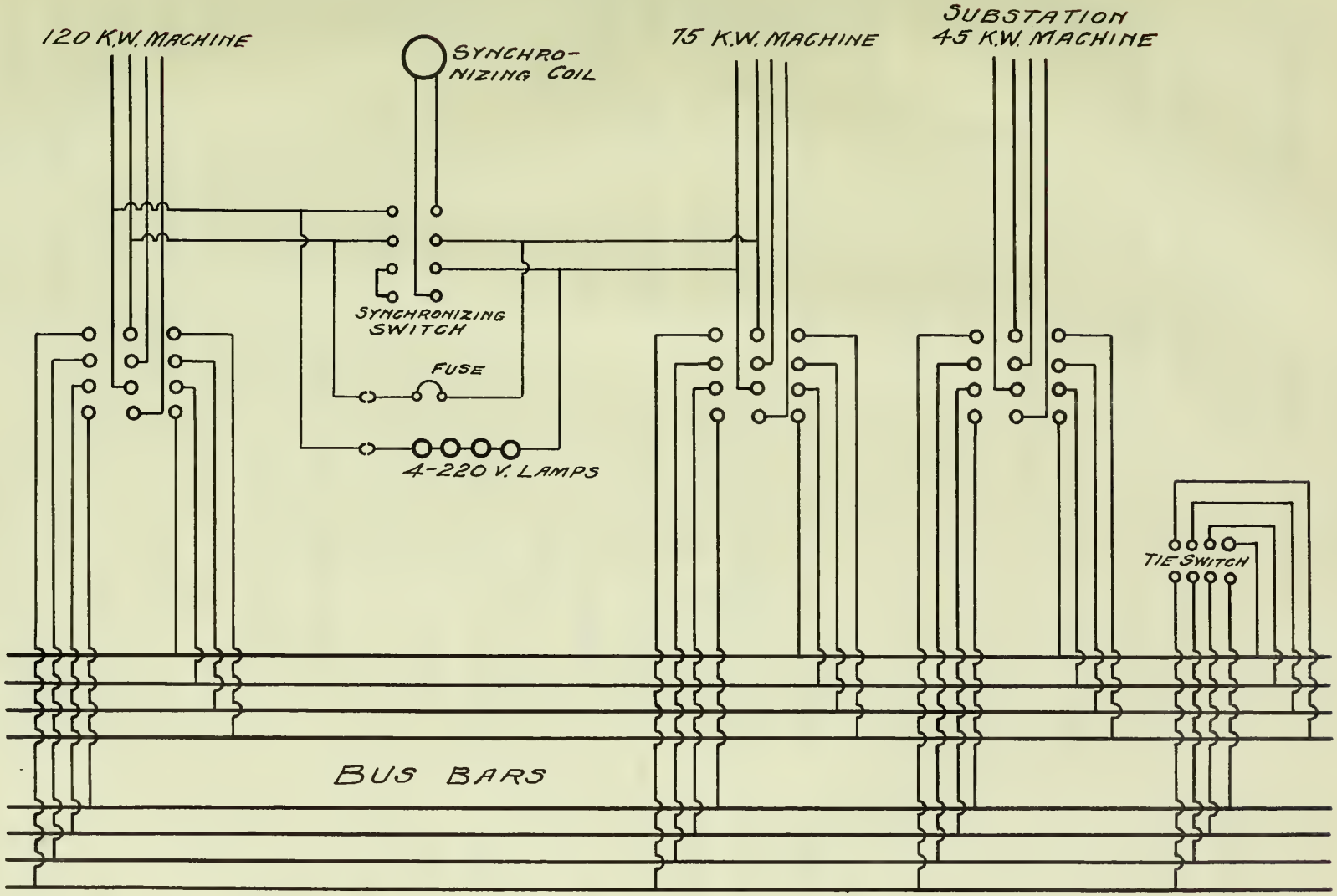
120 K.W. MACHINE
SYNCHRO-
NIZING COIL
75 K.W. MACHINE
SUBSTATION
45 K.W. MACHINE
SYNCHRONIZING
SWITCH
FUSE
4-220 V. LAMPS
TIE SWITCH
BUS BARS

FIG. 7.

CONNECTIONS AND METHOD SUGGESTED .

Connections, - Figure 7 shows a diagram of the connections that are to be made in order that the proposed method of operating may be carried out. The substation circuit is to be connected to the large double throw switch, now on the board, which will allow it to be thrown to either bus. A new bus tie switch is to be installed , by means of which the two buses can be tied together. This will require a switch with a capacity of least 150 amperes . The synchronizing coil is to be attached to the back of the board, and connected to a small, four pole,single throw switch now on the board. Leads from this switch are to be connected to corresponding phases of the machines as shown. The connections are to be made outside of the machine switches so that the two machines could be synchronized if neither of them were connected to the bus bars. By means of this connection the machine being synchronized may be switched to the same bus with the machine already in operation or it may be switched to the second bus , and the bus tie switch closed. The conditions for synchronizing are to be indicated by four 220 volt lamps connected in series to the sides of the synchronizing phase containing the coil. The opposite sides of this phase are to be connected by a No. 14 wire. These connections are to be made as shown in the diagram.

Method , - With the connections as just outlined the two machines may be paralleled at any time desired with absolute safety. If at any time it is desired to do repair work or change the connections on one bus the circuits and the three

machines may be thrown to the other bus and the one to be worked on will be dead. One of the main points in favor of this method will be when shutting down one machine in the evening when the two are operating on different buses. The plans is , to synchronize the machines by means of the coil, close the bus tie switch, shift the load to the machine to be left in service then shut down the other machine. By this means there will be no flashing of the lights,and there need not be a noticeable variation in voltage.

This method will simplify synchronizing to such an extent that even an unskilled operator can parallel the machines without danger of injury to them or to himself. It will make the whole system more flexible and will make possible such operating as will give to the University of Illinois the electric service that the public of today is demanding.

Bibliography for the Study of Synchronizing
and Synchronizing Apparatus.

The action of Compound Dynamos When Run in Parallel.

Technology Quarterly Dec. 1892, pp 381-400.

Switchboard Connections and Synchronizing Arrangements for Polyphase Generators.

American Electrician Nov. 1899.

Three-phase Switchboards Apparatus and Synchronizing Methods.

H. E. Raymond, American Electrician Oct. 1897.

The General Plan and Connections of Apparatus on Switchboards.

Wm. Baxter Jr. American Machinist Aug. 10, 1899.

Synchronism Indicator for Use with Parallel Alternating Currents.

Hermann Muller, Elektrotech. Zeitsch, June 15, 1899.

Working Alternators in Parallel at Hastings.

Engineer, London Oct. 9, 1896.

Parallel Operation of Alternators .

Paul M. Lincoln, Journal Franklin Institute, April 1902.

Some notes on Synchronizing.

Joseph M. Roman, Elect. World & Eng. June 14, 1902.

Synchronizers and Parallel Operation of Dynamos.

Arthur B. Weeks, Engineer U.S.A. Dec. 15, 1903 .

Alternators in Parallel.

H. Bohle, Electrician, London, March 4, 1904.

Synchronism and Frequency Indication.

P. M. Lincoln, Transactions A.I.E.E. June & July 1901.

A New Synchronism Indicators for Alternators.

Fred B. Woodbury, Scientific American, Dec. 7, 1901.

Construction of a Three Phase Synchronizer.

Paul C. Percy, American Electrician, May 1904.
Construction of a Two Phase Synchronizer.

Paul C. Percy, American Electrician June 1904.
The Automatic Synchronizer.

N. G. Meade Elect. Club Journal, May 1905.
Automatic Synchronizing of Generators and Rotaries.

Paul MacGahan, Engineer U. S.A. July 1, 1905.
Synchronizing Devices.

F. H. Davies, Elect. Eng'r, London, Oct. 2, 1903 .
The Synchroscope.

D. H. Cohan, Elect. World, May 4, 1907.
The Synchroscope.

S. R. Dodds, Elect. World, Aug. 17, 1907.
Synchronizing.

Paul MacGahan and H. W. Young, Elect. Journal, Sept. 1907.
The Use of Coreless Inductance in the Operation of Synchronous Machines.

Lloyd Garrison & G. A. Williams.
1907 G19 U of I Library.
Synchronizing of Alternators.

R. A. Brooks & H .C. Gardner, 1907 B79 U of I Library.
Parallel Operation of Synchronous Machines.

M. K. Akers, Ak 3 , U of I Library.
Notes on the Parallel Operation of Alternators.

Dr. G. Benischke, Elektrotech, Zeitsch. July 5, 1906.
The Engineer's Part in Paralleling Alternators.

W. T. Fernandez, Power, Aug. 1906.
The Self-synchronizing of Alternators.

Morgan Brooks & M. K. Akers A.I.E.E. June 1906.

Arrangement for the Automatic Parallel Running of Alternators.

Dr. Gustav Benischke, Electrolech und Meachinenbau .

July 22, 1906.

Synchronizing and Synchronizing Devices.

Foster's Handbook pp 417 - 421.

The information for this bibliography has been obtained from the following sources, -

The Engineering Index , 1892 - 1908.

The Engineering Index Annual, 1907.

General Index of Engineering News, 1874 - 1899.

Descriptive index of Current Engineering Literature, 1884-1891.

An Index to Engineering Periodicals, 1883 - 1892.

Poole's Index.

The Library Card Index.

UNIVERSITY OF ILLINOIS-URBANA
3 0112 086856892